Total No. of Pages 03

Roll No. .....

SIXTH SEMESTER

B. Tech. IIT

MID SEMESTER EXAMINATION

March-2018

IT306 ARTIFICIAL INTELLIGENCE AND EXPERT SYSTEMS

Time: 1:30 Hours

Max. Marks: 20

Note: Answer *ALL* questions.
Assume suitable missing data, if any.

1. What is Artificial Intelligent system? What are various task domains of AI?

[2]

2. You have three jugs of 12 gallon, 8 gallon and 3 gallon and a water tap. You can fill the jugs up on and empty them out from onto another jug or on the ground. Your objective is to measure exactly one gallon. Give the complete state space model and set of all applicable and feasible rules. [2]

3. Suppose that the first step of the operation of the Best First Search algorithm results in the following situation(a+n)means that value of *h* a node is 'a' and value 'n' is level no.

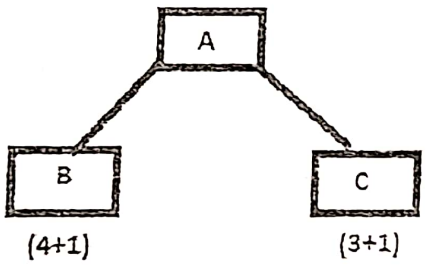

2nd and 3rd step result in the following sequence of situation.

P.T.O.

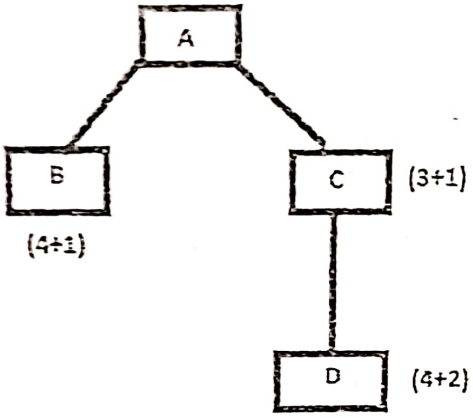

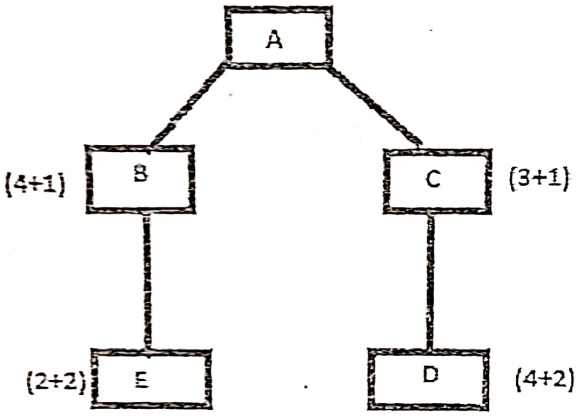

(i) What node will be expanded at the next step?
(ii) Can we guaranty that the best solution will be found?
Also Write steps of the algorithm. [4]

4. Solve the following Crypt-arithmetic puzzles-

1. CRACK
+HACK

ERROR
---
2. FOUR
+MICE

FOUND
---

[4]

5. Explain A* Search Algorithm and Apply it on the following graph-

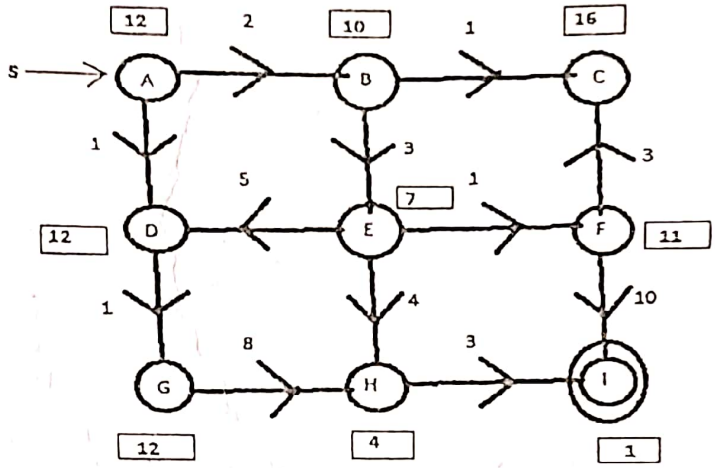

[4]

6. Explain Alpha-Beta Cutoff in Min-Max Algorithm and apply it on the following tree and calculate alpha and beta values of all nodes and tell whether there is requirement of pruning or not?

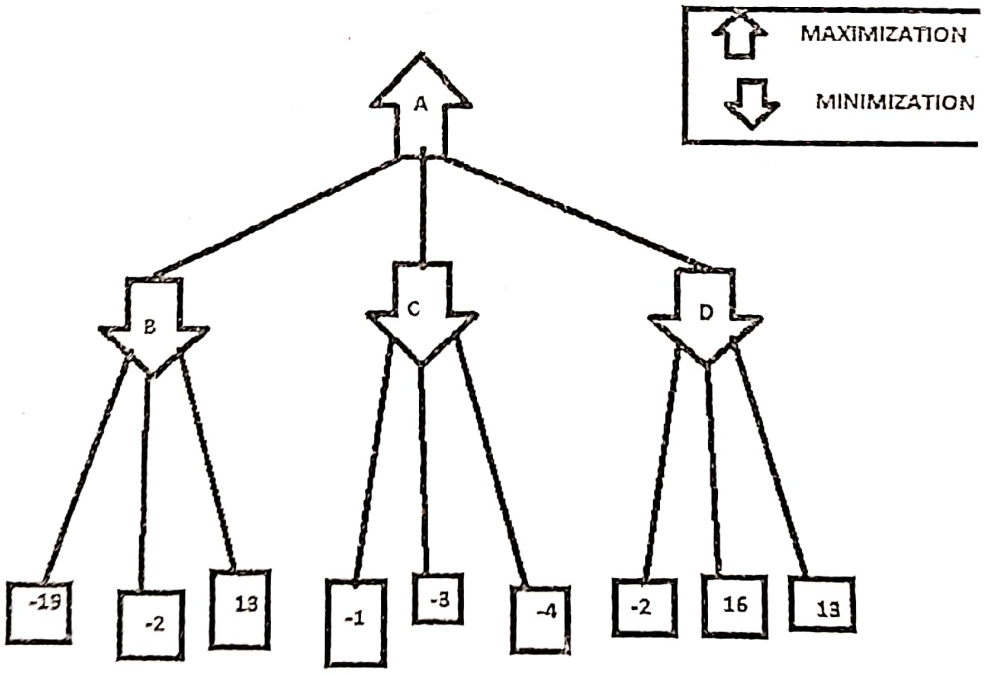

[4]

END